REV	DESCRIPTION	DATE	INITIALS
C	DEFLECTION CALCULATIONS UPDATED	7/21/2017	JD

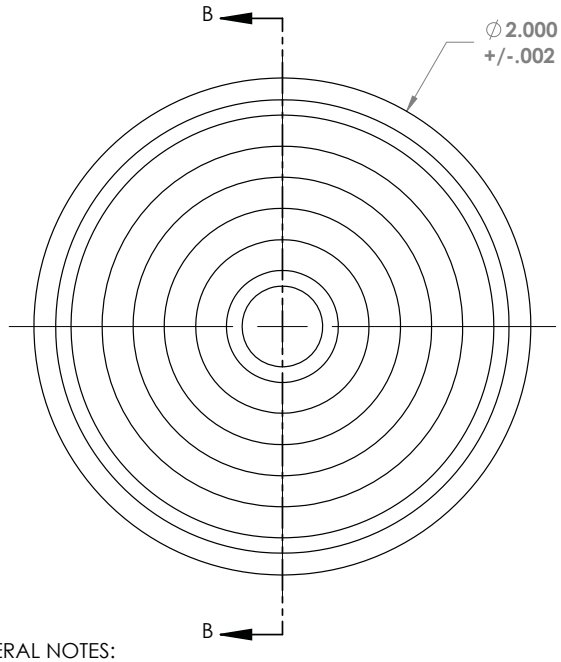

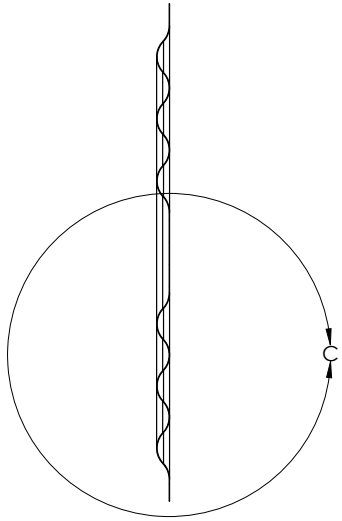

SECTION B-B

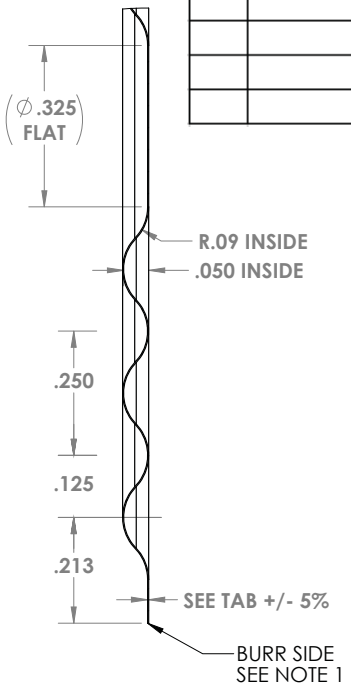

DETAIL C
SCALE 4 : 1

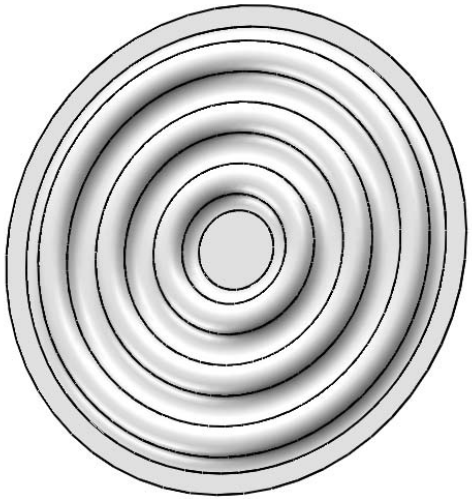

GENERAL NOTES:

1) BURR TO BE 30% OF MATERIAL THICKNESS
2) MAX CAMBER (POTATO CHIPPING) OF 2% OF OD
3) ALL RIPPLE DIMENSIONS IN VIEW B ARE TOOL CONTROLLED
4) MANUFACTURE DIAPHRAGM FROM TOOL T-LSHP-2.000
5) DINGS AND DENTS ACCEPTABLE IF DETECTED ON ONE SIDE ONLY
6) DIAPHRAGMS TO BE NESTED AND PACKED TO AVOID DAMAGE

TAB	Part Name	Diameter	Thickness	Material	Specification	Deflection *
-1	**LSHP**2.000-0020-718	2.000	0.002	IC718	AMS-5596	0.0061
-2	**LSHP**2.000-0030-316	2.000	0.003	SS316L	AMS-5507	0.0030
-3	**LSHP**2.000-0030-625	2.000	0.003	IC625	AMS-5599	0.0028
-4	**LSHP**2.000-0030-718	2.000	0.003	IC718	AMS-5596	0.0029

* Deflections listed at 1.0 psi are simulated results. Actual results may vary.

UNLESS OTHERWISE SPECIFIED:
DIMENSIONS ARE IN INCHES
TOLERANCES:
FRACTIONAL ±1/32
ANGULAR: MACH ± BEND ±
TWO PLACE DECIMAL ± .015
THREE PLACE DECIMAL ± .005

INTERPRET GEOMETRIC TOLERANCING PER: ASME Y14.5M94

DO NOT SCALE DRAWING

	NAME	DATE
DRAWN	WAGNER	9-22-15
CHECKED	DEBONE	9-22-15
ENG APPR.		
MFG APPR.		
Q.A.		

PROPRIETARY AND CONFIDENTIAL
THE INFORMATION CONTAINED IN THIS DRAWING IS THE SOLE PROPERTY OF HUDSON TECHNOLOGIES. ANY REPRODUCTION IN PART OR AS A WHOLE WITHOUT THE WRITTEN PERMISSION OF HUDSON TECHNOLOGIES IS PROHIBITED.

TITLE: Metal Diaphragm

Hudson Technologies

SIZE	DWG. NO.	REV
B	LSHP2.000-TAB	C

SCALE: 2:1 WEIGHT: SHEET 1 OF 1